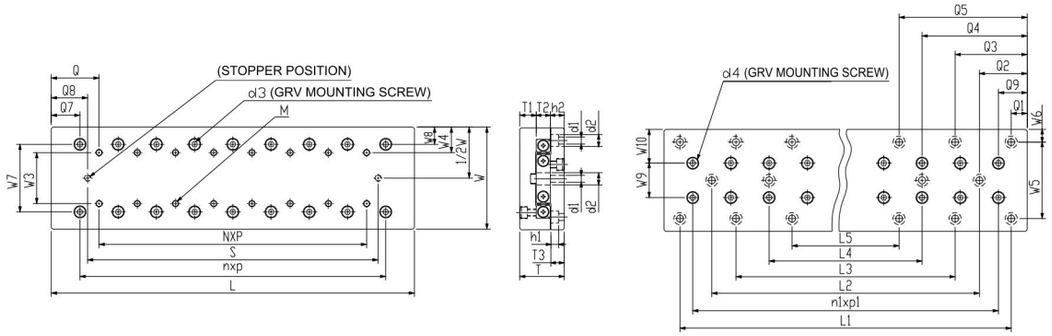

Specification

Model No.			Max. Stroke (mm)	Roller Dia. (mm)	Main Dimensions (mm)						Table Mounting Dimensions (mm)															
Standard	Antirust	Black Coating			W	T	L	T_1	T_2	T_3	N*P	n*p	M	S	d_3	Q	Q_7	Q_8	W_3	W_4	W_7	W_8	L_1	L_2	L_3	n_1*p_1
GRB30-25	GRB30-25-N	GRB30-25-B	12				25				/	1*10		20				2.5					18			1*10
GRB30-35	GRB30-35-N	GRB30-35-B	18				35				1*10	2*10		26				4.5					28		/	2*10
GRB30-45	GRB30-45-N	GRB30-45-B	25				45				2*10	3*10		33				6					38			3*10
GRB30-55	GRB30-55-N	GRB30-55-B	32	Ø1.5	30±0.1	17±0.1	55	7	4	5.5	3*10	4*10	M2	40	4.1	12.5	7.5	7.5	10	10	18.4	5.8	48	/	28	4*10
GRB30-65	GRB30-65-N	GRB30-65-B	40				65				4*10	5*10		48				8.5					58		38	5*10
GRB30-75	GRB30-75-N	GRB30-75-B	45				75				5*10	6*10		53				11					68		48	6*10
GRB30-85	GRB30-85-N	GRB30-85-B	50				85				6*10	7*10		58				13.5					78		58	7*10
GRB40-35	GRB40-35-N	GRB40-35-B	18	Ø2.0			35	8	6	6.5	/	1*15		29	6		10	3			25	7.5	25			1*15
GRB40-50	GRB40-50-N	GRB40-50-B	30				50				1*15	1*25		41			12.5	4.5					40		/	1*25
GRB40-65	GRB40-65-N	GRB40-65-B	40				65				2*15			51			20	7					55			1*25
GRB40-80	GRB40-80-N	GRB40-80-B	50	Ø3.0	40±0.1	21±0.1	80	7	8	5.5	3*15	2*25	M3	61	7.5	17.5	15	9.5	15	12.5	25.5	7.25	70	/	40	2*25
GRB40-95	GRB40-95-N	GRB40-95-B	60				95				4*15			71			22.5	12					85		55	2*25
GRB40-110	GRB40-110-N	GRB40-110-B	70				110				5*15	3*25		81			17.5	14.5					100		70	3*25
GRB40-125	GRB40-125-N	GRB40-125-B	80				125				6*15			91			25	17					115		85	3*25
GRB60-55	GRB60-55-N	GRB60-55-B	30				55				/	1*25		44				5.5					35			1*25
GRB60-80	GRB60-80-N	GRB60-80-B	45				80				1*25	2*25		59				10.5					60		/	2*25
GRB60-105	GRB60-105-N	GRB60-105-B	60				105				2*25	3*25		74				15.5					85			3*25
GRB60-130	GRB60-130-N	GRB60-130-B	75	Ø3.0	60±0.1	28±0.1	130	10.5	8	9	3*25	4*25	M4	89	7.5	27.5	15	20.5	25	17.5	39	10.5	110		/	4*25
GRB60-155	GRB60-155-N	GRB60-155-B	90				155				4*25	5*25		104				25.5					135	85		5*25
GRB60-180	GRB60-180-N	GRB60-180-B	105				180				5*25	6*25		119				30.5					160	110		6*25
GRB60-205	GRB60-205-N	GRB60-205-B	130				205				6*25	7*25		144				30.5					185	135	85	7*25

Ordering Example :	GRB	-	30	-	25	-	N
	B type table		Table width		Table length		Antirust

Material Specification

Component / Material / Model No.	Table	Rail	Retainer	Roller
GRB	Aluminum alloy +black anodized	SUJ2	SUS304	SUJ2
GRB - N	S50C+Ni	SUJ2+Ni	SUS304	SUJ2
GRB - B	S50C +phosphate	SUJ2	SUS304	SUJ2

GRB-N No Surface finished to V-groove surface of the rail.

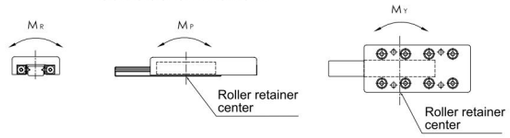

★ Each of load and torque changes oppositely in stroke variation

Base Mounting Dimensions (mm)													Basic Dynamic Load Rating C(N)	Basic Static Load Rating Co(N)	Allow-Able Load Fu(N)	Static Rated Moment			Weight (kg)		Table Moving Accuracy (μm)	
Q_1	Q_2	Q_3	Q_9	W_5	W_6	W_9	W_{10}	d_1	d_2	d_4	h_1	h_2				M_R (N·m)	M_P (N·m)	M_Y (N·m)	Standard	Antirust	Center Parallelism	Side Parallelism
3.5	/	/	7.5	22	4	/	15	2.55	4.1	4.1	2.5	6	379	576	192	2.6	1.2	1.4	0.04	0.09	2	4
													523	865	288	3.9	2.6	3.0	0.06	0.12		
													657	1,153	384	5.2	4.6	5.2	0.07	0.16		
		13.5											783	1,441	480	6.5	7.2	7.9	0.09	0.19		5
													903	1,729	576	7.8	10.4	11.2	0.10	0.23		
													1,131	2,306	769	10.4	18.4	17.3	0.12	0.27		
													1,240	2,594	865	11.7	23.3	22.0	0.14	0.30		
5	/	/	10	30	5	/	20	3.5	6	6	3.5	7	895	1,170	390	7.0	3.1	3.9	0.10	0.20	2	4
											3.2	6	2,901	4,567	1,522	42.6	22.8	26.6	0.16	0.29		
			17.5										2,901	4,567	1,522	42.6	22.8	19.0	0.18	0.36		5
		20	10										4,338	7,611	2,537	71.0	63.4	57.1	0.25	0.46		
			17.5										3,640	6,089	2,030	56.8	40.6	45.7	0.27	0.53		
													5,005	9,133	3,044	85.2	91.3	98.9	0.34	0.63	3	6
			25										5,005	9,133	3,044	85.2	91.3	83.7	0.36	0.69		
10	/	/	15	40	10	17	21.5	4.5	7.5	7.5	4.5	9.5	2,901	4,567	1,522	42.6	22.8	26.6	0.31	0.65	2	5
													4,338	7,611	2,537	71.0	63.4	57.1	0.46	0.96		
													5,646	10,655	3,552	99.5	124.3	115.4	0.61	1.27	3	6
													6,268	12,178	4,059	113.7	162.4	172.5	0.76	1.57		
	35												7,462	15,222	5,074	142.1	253.7	266.4	0.90	1.87		
													8,603	18,266	6,089	170.5	365.3	350.1	1.05	2.18		7
		60											9,157	19,789	6,596	184.7	428.8	445.2	1.20	2.47		

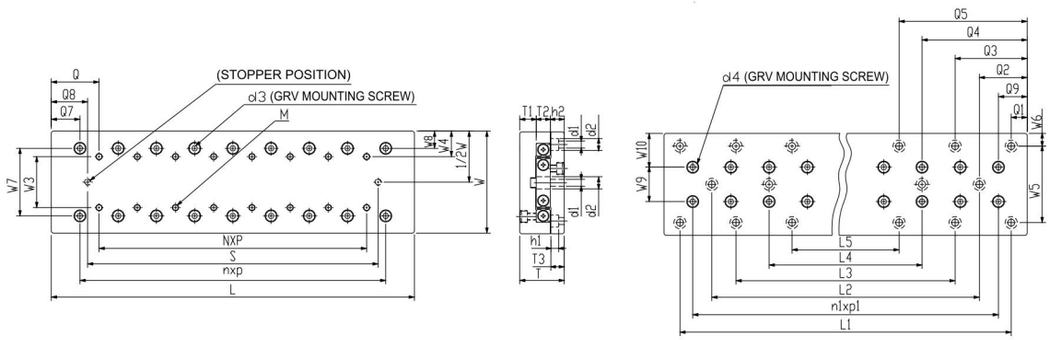

Specification

Model No.			Max. Stroke (mm)	Roller Dia. (mm)	Main Dimensions (mm)						Table Mounting Dimensions (mm)																				
Standard	Antirust	Black Coating			W	T	L	T_1	T_2	T_3	N*P	n*p	M	S	d_3	Q	Q_7	Q_8	W_3	W_4	W_7	W_8	L_1	L_2	L_3	L_4	L_5	n_1*p_1
GRB80-85	GRB80-85-N	GRB80-85-B	50				85				/	1*40		64				10.5					40					1*40
GRB80-125	GRB80-125-N	GRB80-125-B	75				125				1*40	2*40		89				18					80		/			2*40
GRB80-165	GRB80-165-N	GRB80-165-B	105				165				2*40	3*40		119				23					120					3*40
GRB80-205	GRB80-205-N	GRB80-205-B	135	Ø4.0	80±0.1	35±0.1	205	13	11	10.5	3*40	4*40	M5	149	9.5	42.5	22.5	28	40	20	53	13.5	160	/	80	/	/	4*40
GRB80-245	GRB80-245-N	GRB80-245-B	155				245				4*40	5*40		169				38					200		120			5*40
GRB80-285	GRB80-285-N	GRB80-285-B	185				285				5*40	6*40		199				43					240		160			6*40
GRB80-325	GRB80-325-N	GRB80-325-B	215				325				6*40	7*40		229				48					280		200		120	7*40
GRB100-110	GRB100-110-N	GRB100-110-B	60				110				/	1*50		77				16.5					90	/				1*50
GRB100-160	GRB100-160-N	GRB100-160-B	95				160				1*50	2*50		113				23.5					140					2*50
GRB100-210	GRB100-210-N	GRB100-210-B	130				210				2*50	3*50		148				31					190	90	/			3*50
GRB100-260	GRB100-260-N	GRB100-260-B	165	Ø6.0	100±0.1	45±0.1	260	16	15	13	3*50	4*50	M6	183	11	55	30	38.5	50	25	64	18	240	140		/	/	4*50
GRB100-310	GRB100-310-N	GRB100-310-B	200				310				4*50	5*50		218				46					290	190				5*50
GRB100-360	GRB100-360-N	GRB100-360-B	235				360				5*50	6*50		253				53.5					340	240	140			6*50
GRB100-410	GRB100-410-N	GRB100-410-B	265				410				6*50	7*50		283				63.5					390	290	190			7*50
GRB100-510	GRB100-510-N	GRB100-510-B	350				450				7*50	8*50		390				60					450	390	290			8*50
GRB145-210	GRB145-210-N	GRB145-210-B	130				210				/	1*100		156				27					100	/				1*100
GRB145-310	GRB145-310-N	GRB145-310-B	180				310				1*100	2*100		206				52					200					2*100
GRB145-410	GRB145-410-N	GRB145-410-B	350	Ø9.0	145±0.1	60±0.1	410	21	22	16	2*100	3*100	M8	376	14	105	55		85	30	98	23.5	300	100	/	/	/	3*100
GRB145-510	GRB145-510-N	GRB145-510-B	450				510				3*100	4*100		476				17					400	200				4*100
GRB145-610	GRB145-610-N	GRB145-610-B	550				610				4*100	5*100		576									500	300				5*100

Ordering Example :	GRB	-	30	-	25	-	N
	B type table		Table width		Table length		Antirust

GRB

GRB-N

GRB-B

Material Specification

Component / Material / Model No.	Table	Rail	Retainer	Roller
GRB	Aluminum alloy +black anodized	SUJ2	SUS304	SUJ2
GRB - N	S50C+Ni	SUJ2+Ni	SUS304	SUJ2
GRB - B	S50C +phosphate	SUJ2	SUS304	SUJ2

GRB-N No Surface finished to V-groove surface of the rail.

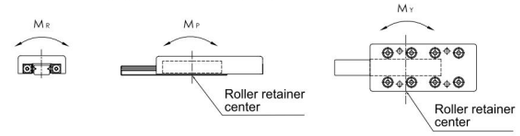

★ Each of load and torque changes oppositely in stroke variation

Base Mounting Dimensions (mm)																Basic Dynamic Load Rating C(N)	Basic Static Load Rating Co(N)	Allow-Able Load Fu(N)	Static Rated Moment			Weight (kg)		Table Moving Accuracy (μm)	
Q_1	Q_2	Q_3	Q_4	Q_5	Q_9	W_5	W_6	W_9	W_{10}	d_1	d_2	d_4	h_1	h_2				M_R (N·m)	M_P (N·m)	M_Y (N·m)	Standard	Antirust	Center Parallelism	Side Parallelism
																6,617	9,357	3,119	124.8	87.3	76.4	0.84	1.72	2	5
		/														9,097	14,035	4,678	187.1	196.5	180.1	1.25	2.55		6
																10,264	16,375	5,458	218.3	267.5	286.6	1.65	3.37		
22.5	/		/	/	22.5	60	10	27	26.5	5.5	9.5	9.5	6	11		12,492	21,053	7,018	280.7	442.1	466.7	2.06	4.18	3	7
		62.5														14,612	25,732	8,577	343.1	660.4	690.5	2.46	5.00		
																16,646	30,410	10,137	405.5	922.4	957.9	2.87	5.83		
				102.5												18,612	35,089	11,696	467.8	1228.1	1187.2	3.27	6.64	4	8
	/															13,923	21,053	7,018	315.8	252.6	221.1	1.72	3.51		6
		/														16,592	26,316	8,772	394.7	394.7	434.2	2.53	5.15		
																21,596	36,842	12,281	552.6	773.7	828.9	3.34	6.79	3	7
10			/	/	30	60	20	26	37	7	11	11	6.5	14		26,285	47,369	15,790	710.5	1279.0	1207.9	4.13	8.39		
																30,744	57,895	19,298	868.4	1910.5	1823.7	4.95	10.04		
	60															35,024	68,421	22,807	1026.3	2668.4	2565.8	5.75	11.64	4	8
		110														39,160	78,948	26,316	1184.2	3552.6	3434.2	6.56	13.28		
																45,141	84,600	28,200	1269.0	4568.4	4441.5	8.17	16.52		
	/															46,991	72,741	24,247	1745.8	1697.3	1527.6	6.75	13.23	3	7
																61,165	101,838	33,946	2444.1	3326.7	3564.3	10.03	19.62		
55		/	/	/	55	90	27.5	46	49.5	9	14	14	8.5	17.5		67,898	116,386	38,795	2793.3	4345.1	4073.5	13.21	25.88	4	8
	155															80,829	145,482	48,494	3491.6	6789.2	6449.7	16.48	32.26		
																87,562	160,030	53,343	3840.8	7807.6	6958.9	19.75	38.64		